VIBRA-FREE

High Speed Machining just got a lot more affordable

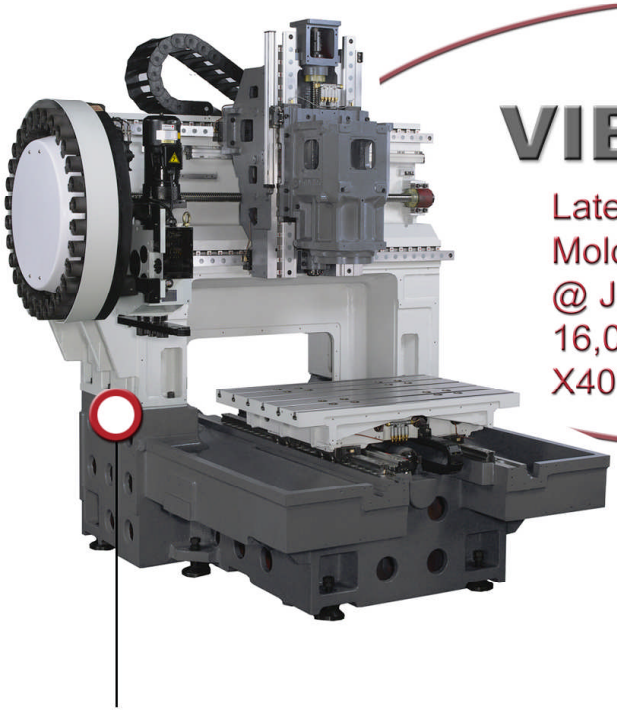

VIBRA-FREE JS

Latest VIBRA-FREE Addition
Mold/Die Performance
@ Job-Shop Affordabillity
16,000RPM with Auto Hi/Low Speed
X40"Y28"Z20" BT40 30-Pocket DATC

Unique Bridge Construction Designed for HSM

Built-in Motor Spindle
for Low-Vibration High RPM

FANUC AI Nano HPCC Powered By UHSHM™

www.VIBRAFREE.com • 1-800-772-3838

Compumachine, Inc. 6 Electronics Ave. Danvers, MA 01923 USA

VIBRA-FREE

Ultra High Speed Hard Milling

VIBRA-FREE JS SPECIFICATIONS	
X Axis Travel	**40 in (1020 mm)**
Y Axis Travel	**28 in (700 mm)**
Z Axis Travel	**20 in (500 mm)**
Spindle Speed	**200 ~ 16,000 rpm**
Spindle Power	20 hp (15 kw) S1 continuous power
	25 hp (18.5 kw) S2 30 minutes power
Table Size	41.3 x 27.6 in (1050 x 700 mm)
Table to Spindle End	7.1 to 26.8 in (180 to 680 mm)
Table Surface	T-slot 6x0.7 in (18mm)
Table Capacity	1763 lb (800 kg)
Rapid Traverse Rate	1,260 in/min (32,000 mm/min)
Maximum Feedrate	787 in/min (20,000 mm/min)
Tool Magazine	30 tools, Double Arm, Random
Tool Holders	NBT 40
Maximum Tool Diameter	3 in (75 mm)
Maximum Tool Length	9.8 in (250 mm)
Maximum Tool Weight	15 lb (7 kg)
Chiller Unit	5 kw
CNC Control	FANUC 18i-MB
Machine Accuracy:	
Positioning	0.00016 in (0.004mm) JIS 6336
Repeatability	0.0001 in (0.002mm) JIS 6336
Motors:	
Axis Drives (X , Y & Z)	4.5 kw (Fanuc Alpha 22is)
Dimensional Data:	
Machine Height	106 in (2,690 mm)
Foot Print	101 x 102 in (2,560 x 2,600 mm)
Net Weight	18,700 LB (8,500 kg)
Service Requirements:	
Electrical Input Voltage	220 VAC
	60 Hz +/- 1 Hz
Total connected power	50 KVA service recommended
Air	100 PSI, 26 cfm, dry air required

Specifications are subject to change without notice

Standard Equipment:

- FANUC 18i-MB CNC control
- AI Nano HPCC (High Precision Contour Control)
- 64 bit RISC board
- 1 GB data server
- Ethernet connection
- Air blast nozzle
- Flood coolant system
- Chip wash down system
- Oil skimmer
- Remote hand pulse generator
- Handheld air gun and coolant spray
- Full chip and coolant enclosure
- Fully enclosed tool changer
- Operator work lights
- Foundation leveling screws & washers
- Operator & maintenance manuals
- Hand tool kit

Options and Accessories:

- Coolant through spindle
- Oil/mist spray
- Z Nano tool length touch off probe
- Laser tool measuring system
- 4th axis rotary table
- 4th and 5th axis rotary tilting table

VIBRA-FREE JS
Dimensions
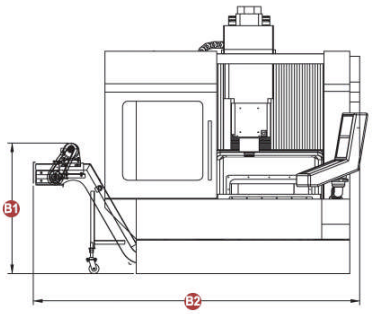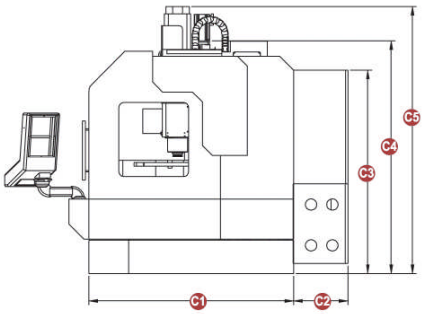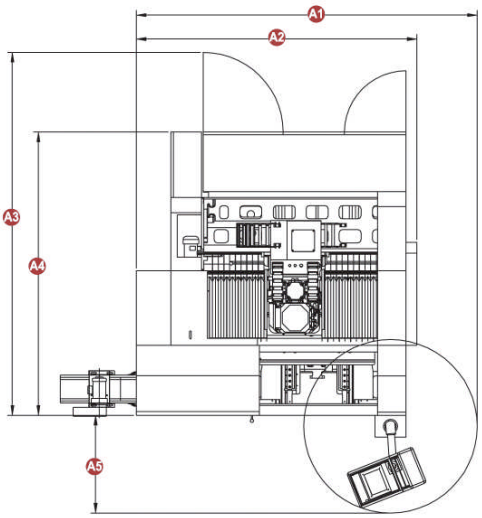
A1	3115 mm	122.6 inch
A2	2560 mm	100.8 inch
A3	3330 mm	131.1 inch
A4	2600 mm	102.4 inch
A5	892 mm	35.1 inch
B1	1315 mm	51.8 inch
B2	3278 mm	129.1 inch
C1	2055 mm	80.9 inch
C2	545 mm	21.5 inch
C3	2049 mm	80.7 inch
C4	2352 mm	92.6 inch
C5	2690 mm	105.9 inch